Cartridge heaters

Basic values:

Parameter	Value
Dimensions	63 x 8.0 x 8.0 mm
Heated area	Ø 6.26 x 33 mm
T_{max}	1 000 °C

Details of Standard:

Description

Cylindrical cartridges are an often-used form of heating element. They are usually inserted in a borehole in a metal part that is machined to fit, in order to heat larger machine parts. Also, Bach RC offers a large number of cartridge heaters. Compared with conventional metallic cartridge heaters, the ceramic heating elements are distinguished by having a very long lifespan, as well as a very high (achievable) power density (power output per surface unit). The dynamism of the heating process can thereby be improved and/or the number of the installed heating elements can be reduced. Machine failure times are minimised and so the productivity of your machines is increased. When installing the ceramic cartridge heaters in metal tools, the substantially lower thermal expansion of silicon nitride compared to metals must be taken into account.

* The actual power depends on resistance, temperature and voltage.

Parameter	Value
Article no.	HPT 100 056
Resistance @ 20 °C	210 Ω ±43 %
Nominal voltage	230 V
Nominal power @ 20 °C	250 W*

Basic Material

Parameter	Scale unit	Si_3N_4
max. temperature (T_{max})	°C	1 000
thermal conductivity (l)	W/mK	40
temperature shock resistance (ΔT)	K	500
emissivity (1 100 °C) (ε)	-	0.96
Young's modulus (E)	GPa	320
bending strength (δ_{BB})	MPa	400
compressive strength (δ_D)	MPa	2 000
coefficient of thermal expansion (α)	10^{-6} K^{-1}	3
density (g)	g/cm³	3.21
specific heat (c_p)	J/kgK	750
porosity (100 - % t.D.)	%	0
critical stress intensity factor (K_{Ic})	MPa $m^{½}$	6
Weibull – modulus (m)	-	7.9

The thermal shock resistance depends on the geometric shape of the heater.

Electrical parameters

Parameter	Scale unit	Si_3N_4
resistivity	Ω cm	$5 \cdot 10^{-3}$ - $5 \cdot 10^{-1}$
isolation resistivity	Ω mm (20 °C)	10^{13}
dielectric strength	kV/mm	25

Emission spectrum

Fully ceramic heating elements are long-wave infrared heaters with a maximum emission of 5 to 10 µm and a radiation coefficient of ε > 0.9.

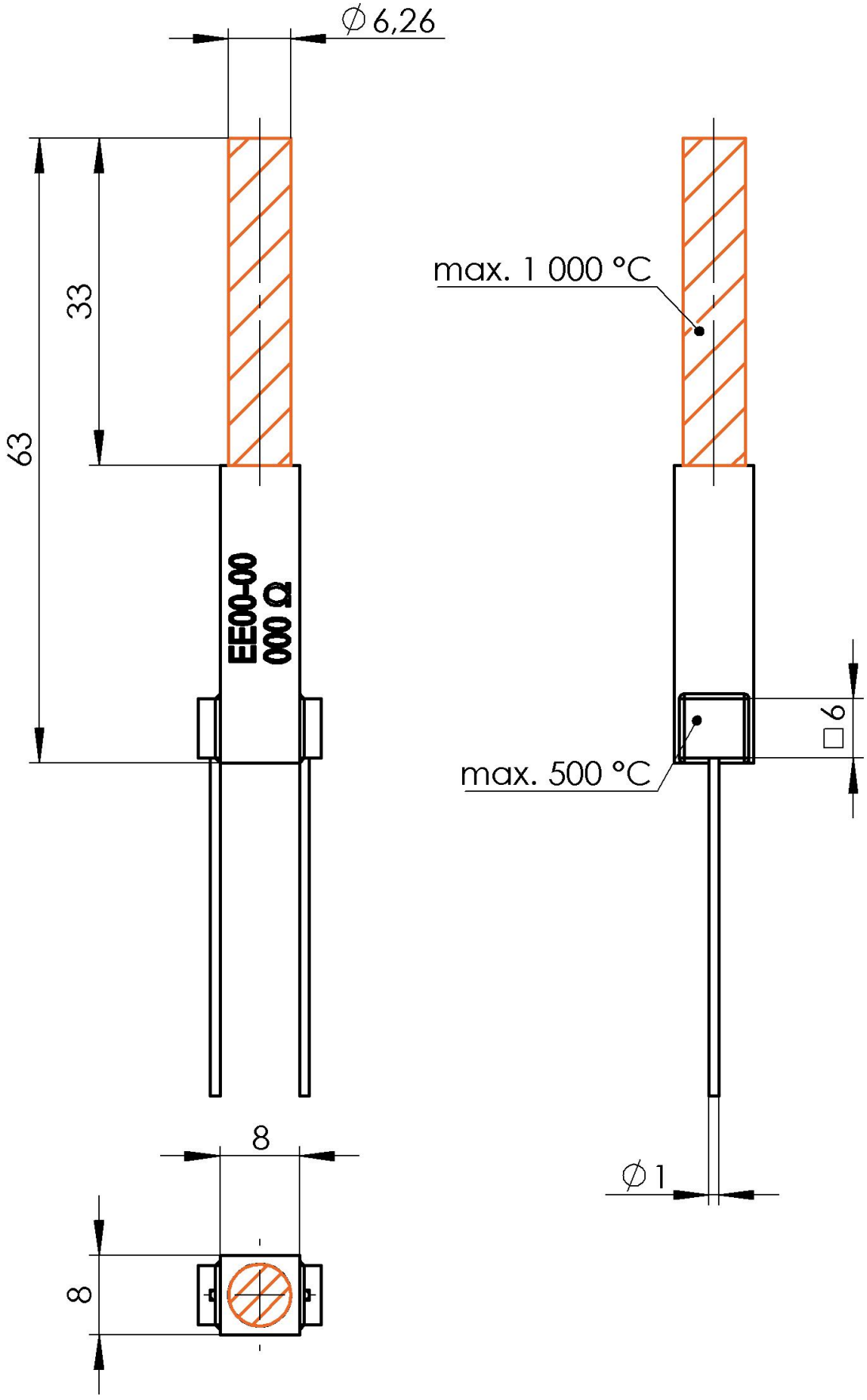
∅6,26
33
63
EE00-00
000 Ω
8
8
max. 1 000 °C
max. 500 °C
□6
∅1

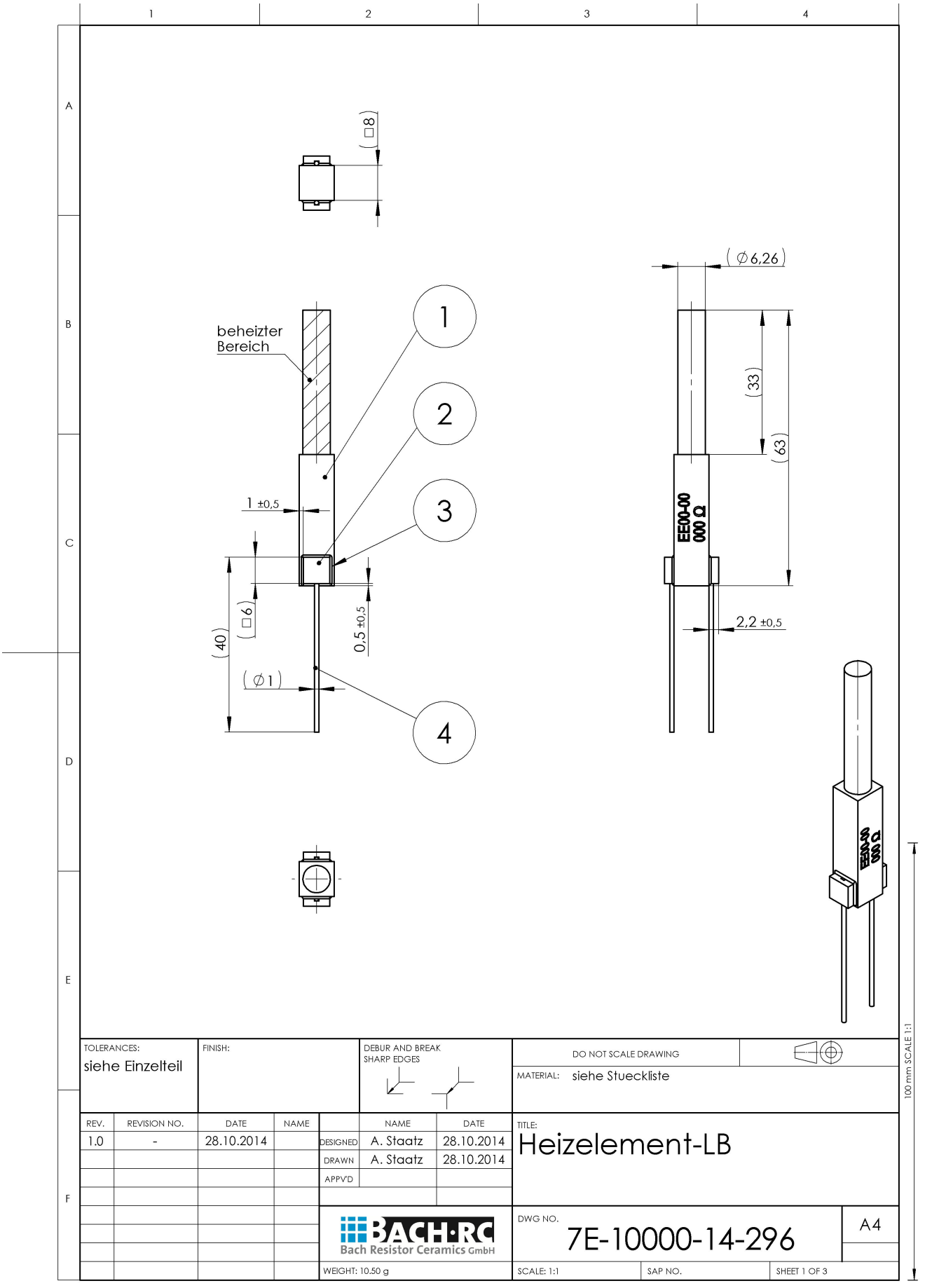

TOLERANCES: siehe Einzelteil	FINISH:	DEBUR AND BREAK SHARP EDGES	DO NOT SCALE DRAWING
			MATERIAL: siehe Stueckliste

REV.	REVISION NO.	DATE	NAME
1.0	-	28.10.2014	

	NAME	DATE
DESIGNED	A. Staatz	28.10.2014
DRAWN	A. Staatz	28.10.2014
APPV'D		

TITLE: Heizelement-LB

BACH·RC Bach Resistor Ceramics GmbH

DWG NO. 7E-10000-14-296 | A4

WEIGHT: 10.50 g | SCALE: 1:1 | SAP NO. | SHEET 1 OF 3

100 mm SCALE 1:1